Cambridge International AS & A Level

Cambridge International Examinations
Cambridge International Advanced Subsidiary and Advanced Level

CANDIDATE NAME

CENTRE NUMBER | | | | | |

CANDIDATE NUMBER | | | | |

4161715495

PHYSICS **9702/42**

Paper 4 A Level Structured Questions **May/June 2018**

2 hours

Candidates answer on the Question Paper.

No Additional Materials are required.

READ THESE INSTRUCTIONS FIRST

Write your Centre number, candidate number and name on all the work you hand in.
Write in dark blue or black pen.
You may use an HB pencil for any diagrams or graphs.
Do not use staples, paper clips, glue or correction fluid.
DO **NOT** WRITE IN ANY BARCODES.

Answer **all** questions.

Electronic calculators may be used.
You may lose marks if you do not show your working or if you do not use appropriate units.

At the end of the examination, fasten all your work securely together.
The number of marks is given in brackets [ ] at the end of each question or part question.

This document consists of **25** printed pages and **3** blank pages.

DC (KN/SG) 144290/4
© UCLES 2018

CAMBRIDGE International Examinations

Data

speed of light in free space	$c = 3.00 \times 10^{8}\,\text{m s}^{-1}$
permeability of free space	$\mu_0 = 4\pi \times 10^{-7}\,\text{H m}^{-1}$
permittivity of free space	$\varepsilon_0 = 8.85 \times 10^{-12}\,\text{F m}^{-1}$
	$(\frac{1}{4\pi\varepsilon_0} = 8.99 \times 10^{9}\,\text{m F}^{-1})$
elementary charge	$e = 1.60 \times 10^{-19}\,\text{C}$
the Planck constant	$h = 6.63 \times 10^{-34}\,\text{J s}$
unified atomic mass unit	$1\,\text{u} = 1.66 \times 10^{-27}\,\text{kg}$
rest mass of electron	$m_e = 9.11 \times 10^{-31}\,\text{kg}$
rest mass of proton	$m_p = 1.67 \times 10^{-27}\,\text{kg}$
molar gas constant	$R = 8.31\,\text{J K}^{-1}\,\text{mol}^{-1}$
the Avogadro constant	$N_A = 6.02 \times 10^{23}\,\text{mol}^{-1}$
the Boltzmann constant	$k = 1.38 \times 10^{-23}\,\text{J K}^{-1}$
gravitational constant	$G = 6.67 \times 10^{-11}\,\text{N m}^2\,\text{kg}^{-2}$
acceleration of free fall	$g = 9.81\,\text{m s}^{-2}$

© UCLES 2018

Formulae

uniformly accelerated motion	$s = ut + \frac{1}{2}at^2$ $v^2 = u^2 + 2as$
work done on/by a gas	$W = p\Delta V$
gravitational potential	$\phi = -\frac{Gm}{r}$
hydrostatic pressure	$p = \rho gh$
pressure of an ideal gas	$p = \frac{1}{3}\frac{Nm}{V}\langle c^2 \rangle$
simple harmonic motion	$a = -\omega^2 x$
velocity of particle in s.h.m.	$v = v_0 \cos \omega t$ $v = \pm \omega\sqrt{(x_0^2 - x^2)}$
Doppler effect	$f_o = \frac{f_s v}{v \pm v_s}$
electric potential	$V = \frac{Q}{4\pi\varepsilon_0 r}$
capacitors in series	$1/C = 1/C_1 + 1/C_2 + \ldots$
capacitors in parallel	$C = C_1 + C_2 + \ldots$
energy of charged capacitor	$W = \frac{1}{2}QV$
electric current	$I = Anvq$
resistors in series	$R = R_1 + R_2 + \ldots$
resistors in parallel	$1/R = 1/R_1 + 1/R_2 + \ldots$
Hall voltage	$V_H = \frac{BI}{ntq}$
alternating current/voltage	$x = x_0 \sin \omega t$
radioactive decay	$x = x_0 \exp(-\lambda t)$
decay constant	$\lambda = \frac{0.693}{t_{\frac{1}{2}}}$

© UCLES 2018

[Turn over

BLANK PAGE

© UCLES 2018

Answer **all** the questions in the spaces provided.

1 (a) (i) A gravitational field may be represented by lines of gravitational force.
State what is meant by a *line of gravitational force*.

.....

.....

.....[1]

(ii) By reference to lines of gravitational force near to the surface of the Earth, explain why the gravitational field strength g close to the Earth's surface is approximately constant.

.....

.....

.....

.....

.....

.....[3]

(b) The Moon may be considered to be a uniform sphere of diameter 3.4×10^3 km and mass 7.4×10^{22} kg. The Moon has no atmosphere.

During a collision of the Moon with a meteorite, a rock is thrown vertically up from the surface of the Moon with a speed of $2.8\,\text{km}\,\text{s}^{-1}$.

Assuming that the Moon is isolated in space, determine whether the rock will travel out into distant space or return to the Moon's surface.

[4]

[Total: 8]

© UCLES 2018

2 **(a)** Use one of the assumptions of the kinetic theory of gases to explain why the potential energy of the molecules of an ideal gas is zero.

.....

.....[1]

(b) The average translational kinetic energy E_K of a molecule of an ideal gas is given by the expression

$$E_K = \frac{1}{2}m\langle c^2\rangle = \frac{3}{2}kT$$

where m is the mass of a molecule and k is the Boltzmann constant.

State the meaning of the symbol

(i) $\langle c^2\rangle$,

.....[1]

(ii) T.

.....[1]

(c) A cylinder of constant volume $4.7 \times 10^4\,\text{cm}^3$ contains an ideal gas at pressure $2.6 \times 10^5\,\text{Pa}$ and temperature 173 °C.

The gas is heated. The thermal energy transferred to the gas is 2900 J. The final temperature and pressure of the gas are T and p, as illustrated in Fig. 2.1.



Fig. 2.1

(i) Calculate

1. the number N of molecules in the cylinder,

N = ...[3]

2. the increase in average kinetic energy of a molecule during the heating process.

increase = ... J [1]

(ii) Use your answer in **(i) part 2** to determine the final temperature T, in kelvin, of the gas in the cylinder.

T = ... K [3]

[Total: 10]

© UCLES 2018

[Turn over

3 **(a)** During melting, a solid becomes liquid with little or no change in volume.

Use kinetic theory to explain why, during the melting process, thermal energy is required although there is no change in temperature.

.....

.....

.....

.....

.....[3]

(b) An aluminium can of mass 160 g contains a mass of 330 g of warm water at a temperature of 38 °C, as illustrated in Fig. 3.1.

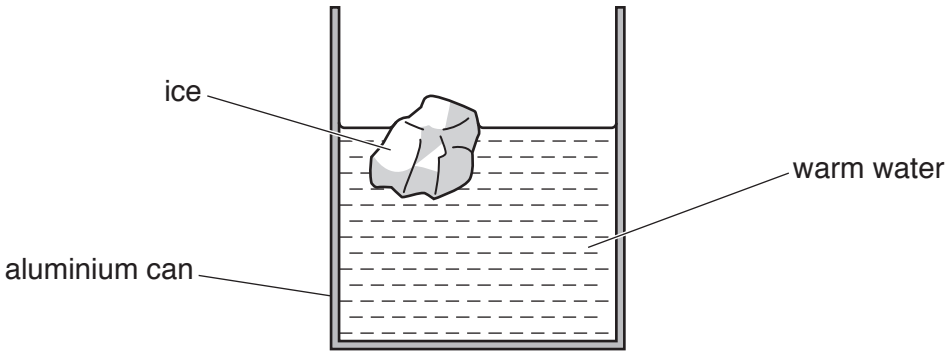

Fig. 3.1

A mass of 48 g of ice at –18 °C is taken from a freezer and put in to the water. The ice melts and the final temperature of the can and its contents is 23 °C.

Data for the specific heat capacity *c* of aluminium, ice and water are given in Fig. 3.2.

	c / J g^{-1} K^{-1}
aluminium	0.910
ice	2.10
water	4.18

Fig. 3.2

© UCLES 2018

Assuming no exchange of thermal energy with the surroundings,

(i) show that the loss in thermal energy of the can and the warm water is 2.3×10^4 J,

[2]

(ii) use the information in **(i)** to calculate a value L for the specific latent heat of fusion of ice.

L = ... $J\,g^{-1}$ [2]

[Total: 7]

4 **(a)** State two conditions necessary for a mass to be undergoing simple harmonic motion.

1. .....

.....

2. .....

.....

[2]

(b) A trolley of mass 950 g is held on a horizontal surface by means of two springs attached to fixed points P and Q, as shown in Fig. 4.1.

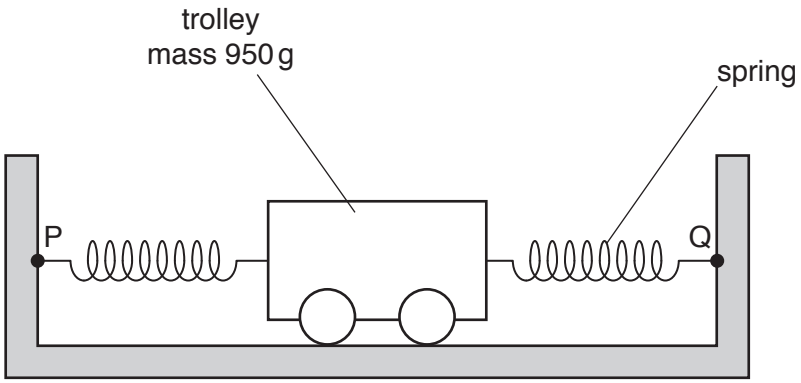

Fig. 4.1

The springs, each having a spring constant k of 230 N m^{-1}, are always extended.

The trolley is displaced along the line of the springs and then released.
The variation with time t of the displacement x of the trolley is shown in Fig. 4.2.

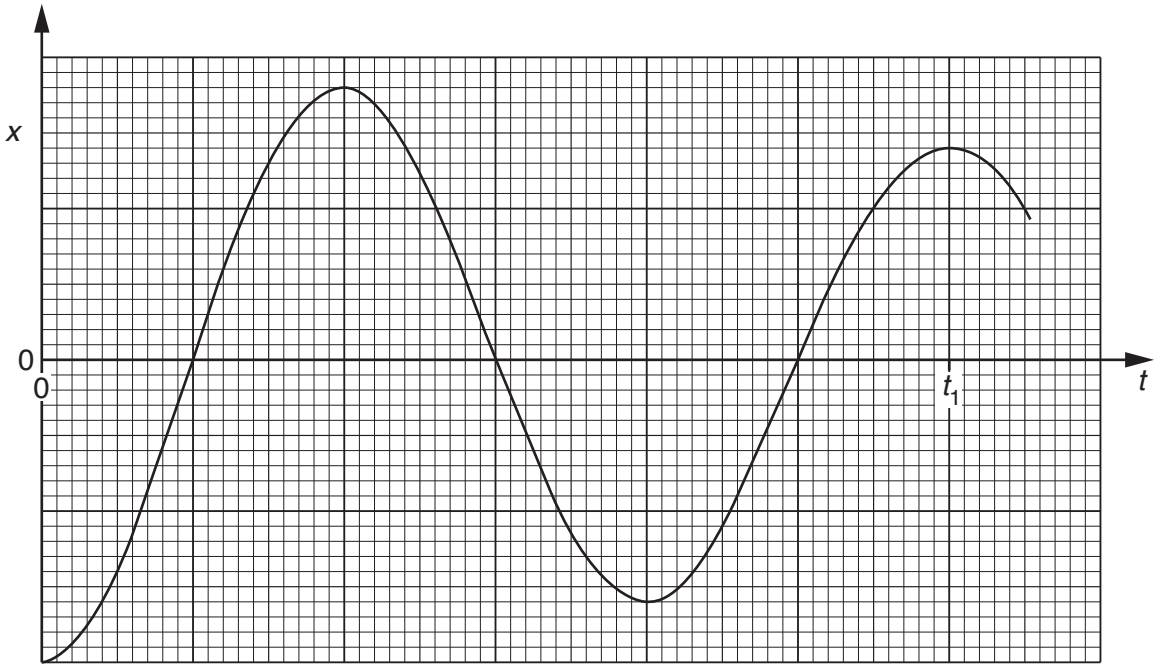

Fig. 4.2

© UCLES 2018

(i) **1.** State and explain whether the oscillations of the trolley are heavily damped, critically damped or lightly damped.

.....

.....

2. Suggest the cause of the damping.

.....

.....

.....

[3]

(ii) The acceleration a of the trolley of mass m may be assumed to be given by the expression

$$a = -\left(\frac{2k}{m}\right)x.$$

1. Calculate the angular frequency ω of the oscillations of the trolley.

ω = ... rad s^{-1} [3]

2. Determine the time t_1 shown on Fig. 4.2.

t_1 = ... s [2]

[Total: 10]

5 **(a)** In radio communication, the bandwidth of an FM transmission is greater than the bandwidth of an AM transmission.

State

(i) what is meant by *bandwidth*,

.....

.....[1]

(ii) one advantage and one disadvantage of a greater bandwidth.

advantage: .....

.....

disadvantage: .....

.....
[2]

(b) A carrier wave has a frequency of 650 kHz and is measured to have an amplitude of 5.0 V.

The carrier wave is frequency modulated by a signal of frequency 10 kHz and amplitude 3.0 V. The frequency deviation of the carrier wave is 8.0 kHz V^{-1}.

Determine, for the frequency modulated carrier wave,

(i) the measured amplitude,

amplitude = ... V [1]

(ii) the maximum and the minimum frequencies,

maximum frequency = ... kHz

minimum frequency = ... kHz
[2]

© UCLES 2018

(iii) the minimum time between a maximum and a minimum transmitted frequency.

time = ... s [1]

[Total: 7]

6 **(a)** Explain what is meant by the *capacitance* of a parallel plate capacitor.

.....

.....

.....

.....[3]

(b) Three parallel plate capacitors each have a capacitance of 6.0 μF.

Draw circuit diagrams, one in each case, to show how the capacitors may be connected together to give a combined capacitance of

(i) 9.0 μF,

[1]

(ii) 4.0 μF.

[1]

(c) Two capacitors of capacitances 3.0 μF and 2.0 μF are connected in series with a battery of electromotive force (e.m.f.) 8.0 V, as shown in Fig. 6.1.

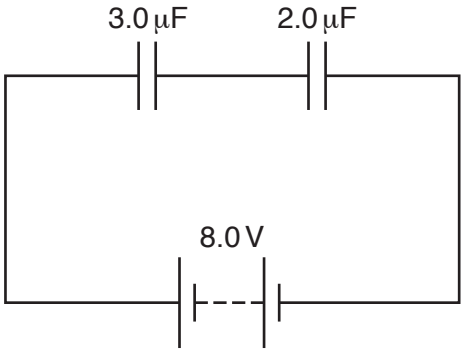

Fig. 6.1

© UCLES 2018

(i) Calculate the combined capacitance of the capacitors.

capacitance = ... μF [1]

(ii) Use your answer in **(i)** to determine, for the capacitor of capacitance 3.0 μF,

1. the charge on one plate of the capacitor,

charge = ... μC

2. the energy stored in the capacitor.

energy = ... J
[4]

[Total: 10]

7 **(a)** Negative feedback is often used in amplifiers.

State

(i) what is meant by *negative feedback*,

.....

.....

.....[2]

(ii) two effects of negative feedback on the gain of an amplifier.

1. .....

.....

2. .....

.....

[2]

(b) An ideal operational amplifier (op-amp) is incorporated into the circuit shown in Fig. 7.1.

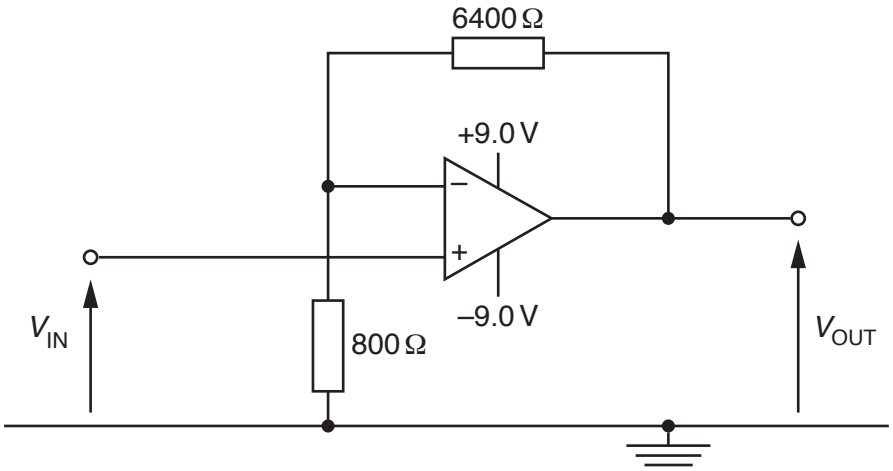

Fig. 7.1

(i) Calculate the gain *G* of the amplifier circuit.

G = ...[1]

© UCLES 2018

(ii) Determine the output potential difference V_{OUT} for an input potential difference V_{IN} of

1. +0.60 V,

V_{OUT} = ... V

2. –2.1 V.

V_{OUT} = ... V
[2]

(iii) The gain of the amplifier shown in Fig. 7.1 is constant.

State one change that may be made to the circuit of Fig. 7.1 so that the amplifier circuit monitors temperature with the gain decreasing as the temperature rises.

.....

.....[1]

[Total: 8]

© UCLES 2018

[Turn over

8 **(a)** Explain how a uniform magnetic field and a uniform electric field may be used as a velocity selector for charged particles.

.....

.....

.....

.....[3]

© UCLES 2018

(b) Particles having mass m and charge $+1.6 \times 10^{-19}$ C pass through a velocity selector. They then enter a region of uniform magnetic field of magnetic flux density 94 mT with speed 3.4×10^{4} m s^{-1}, as shown in Fig. 8.1.

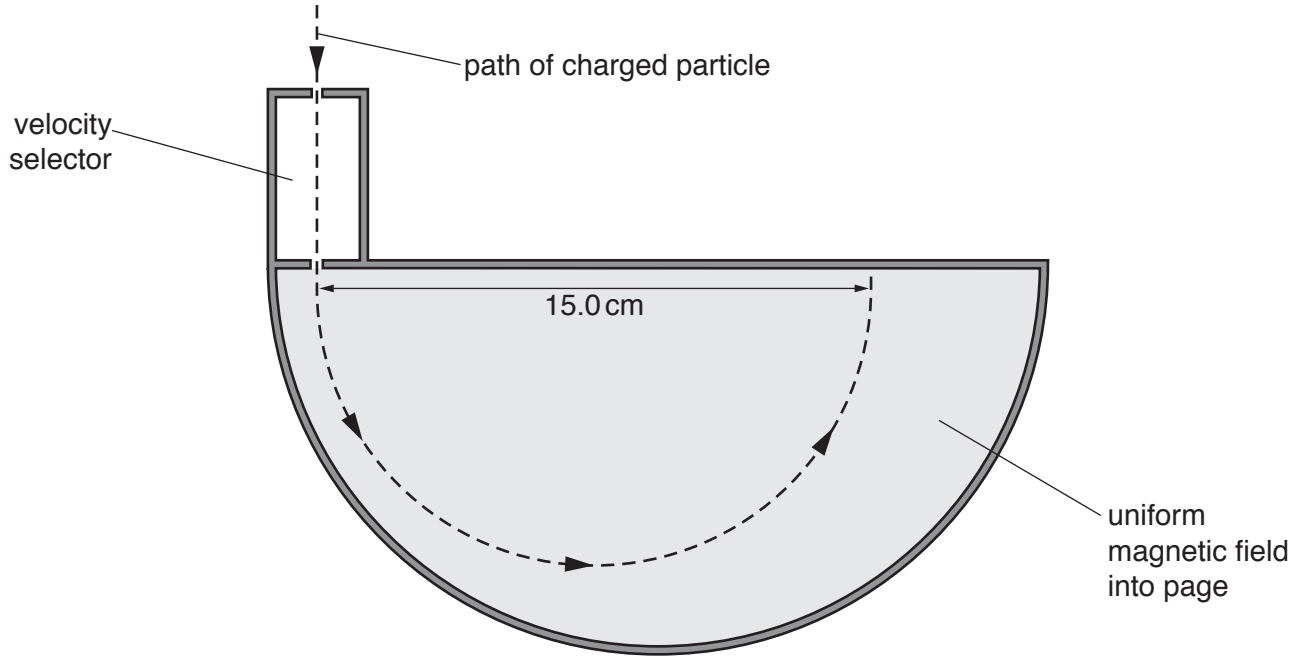

Fig. 8.1

The direction of the uniform magnetic field is into the page and normal to the direction in which the particles are moving.

The particles are moving in a vacuum in a circular arc of diameter 15.0 cm.

Show that the mass of one of the particles is 20 u.

[4]

(c) On Fig. 8.1, sketch the path in the uniform magnetic field of a particle of mass 22 u having the same charge and speed as the particle in **(b)**. [2]

[Total: 9]

© UCLES 2018

[Turn over

9 **(a)** State what is meant by the *magnetic flux linkage* of a coil.

.....

.....

.....

.....[3]

(b) A coil of wire has 160 turns and diameter 2.4 cm. The coil is situated in a uniform magnetic field of flux density 7.5 mT, as shown in Fig. 9.1.

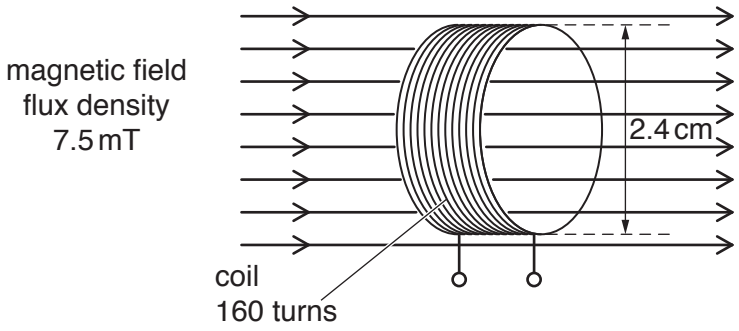

Fig. 9.1

The direction of the magnetic field is along the axis of the coil.

The magnetic flux density is reduced to zero in a time of 0.15 s.

Show that the average e.m.f. induced in the coil is 3.6 mV.

[2]

(c) The magnetic flux density B in the coil in **(b)** is now varied with time t as shown in Fig. 9.2.

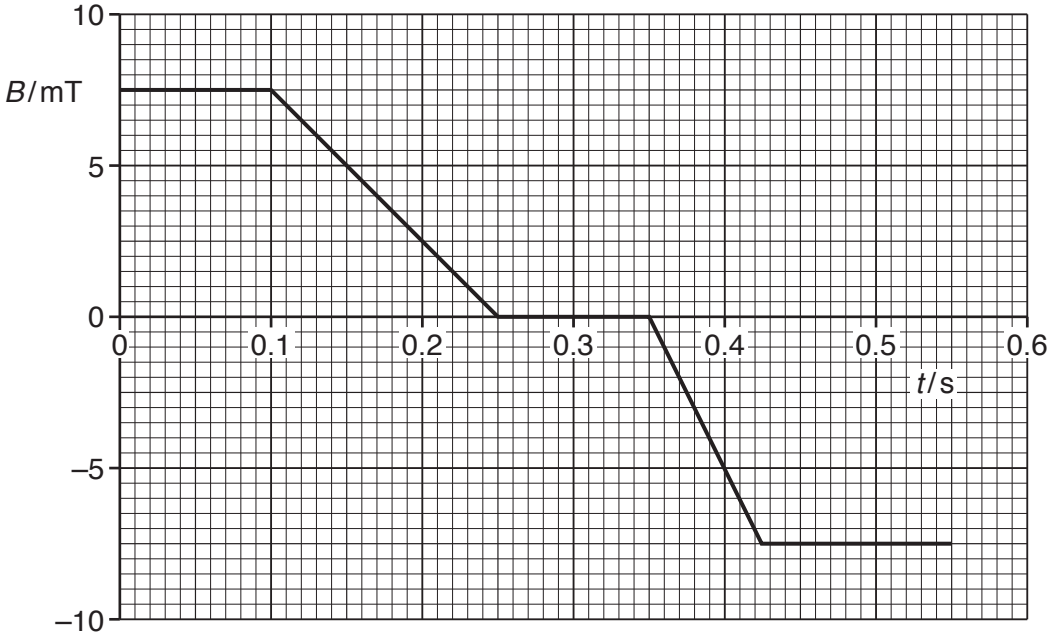

Fig. 9.2

Use data in **(b)** to show, on Fig. 9.3, the variation with time t of the e.m.f. E induced in the coil.

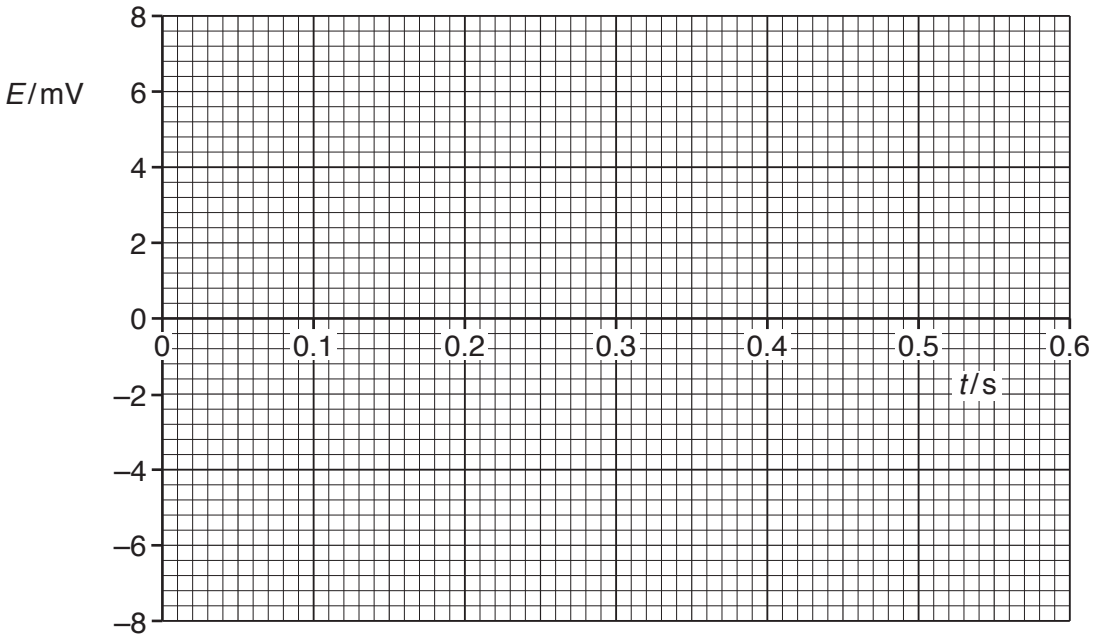

Fig. 9.3

[4]

[Total: 9]

© UCLES 2018

[Turn over

BLANK PAGE

© UCLES 2018

10 (a) Describe the *photoelectric effect*.

.....

.....

.....[2]

(b) Data for the work function energy Φ of two metals are shown in Fig. 10.1.

	Φ/ J
sodium	3.8×10^{-19}
zinc	5.8×10^{-19}

Fig. 10.1

Light of wavelength 420 nm is incident on the surface of each of the metals.

(i) State what is meant by a *photon*.

.....

.....

.....[2]

(ii) Calculate the energy of a photon of the incident light.

energy = ... J [2]

(iii) State whether photoelectric emission will occur from each of the metals.

sodium: .....

zinc: .....
[1]

[Total: 7]

11 (a) Describe the basic principles of CT scanning (computed tomography).

.....

.....

.....

.....

.....

.....

.....

.....

.....

.....

.....

.....[5]

(b) By reference to your answer in **(a)**, suggest why

(i) CT scanning was not possible before fast computers with large memories were available,

.....

.....

.....[1]

(ii) the radiation dose for a CT scan is much larger than for an X-ray image of a leg bone.

.....

.....

.....[1]

[Total: 7]

12 (a) State what is meant by *radioactive decay*.

.....

.....

.....

.....[2]

(b) An unstable nuclide P has decay constant λ_P and decays to form a nuclide D.
This nuclide D is unstable and decays with decay constant λ_D to form a stable nuclide S. The decay chain is illustrated in Fig. 12.1.

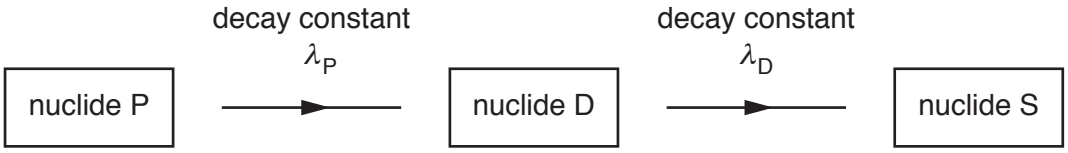

Fig. 12.1

The symbols P, D and S are not the nuclide symbols.

Initially, a radioactive sample contains only nuclide P.

The variation with time *t* of the number of nuclei of each of the three nuclides in the sample is shown in Fig. 12.2.

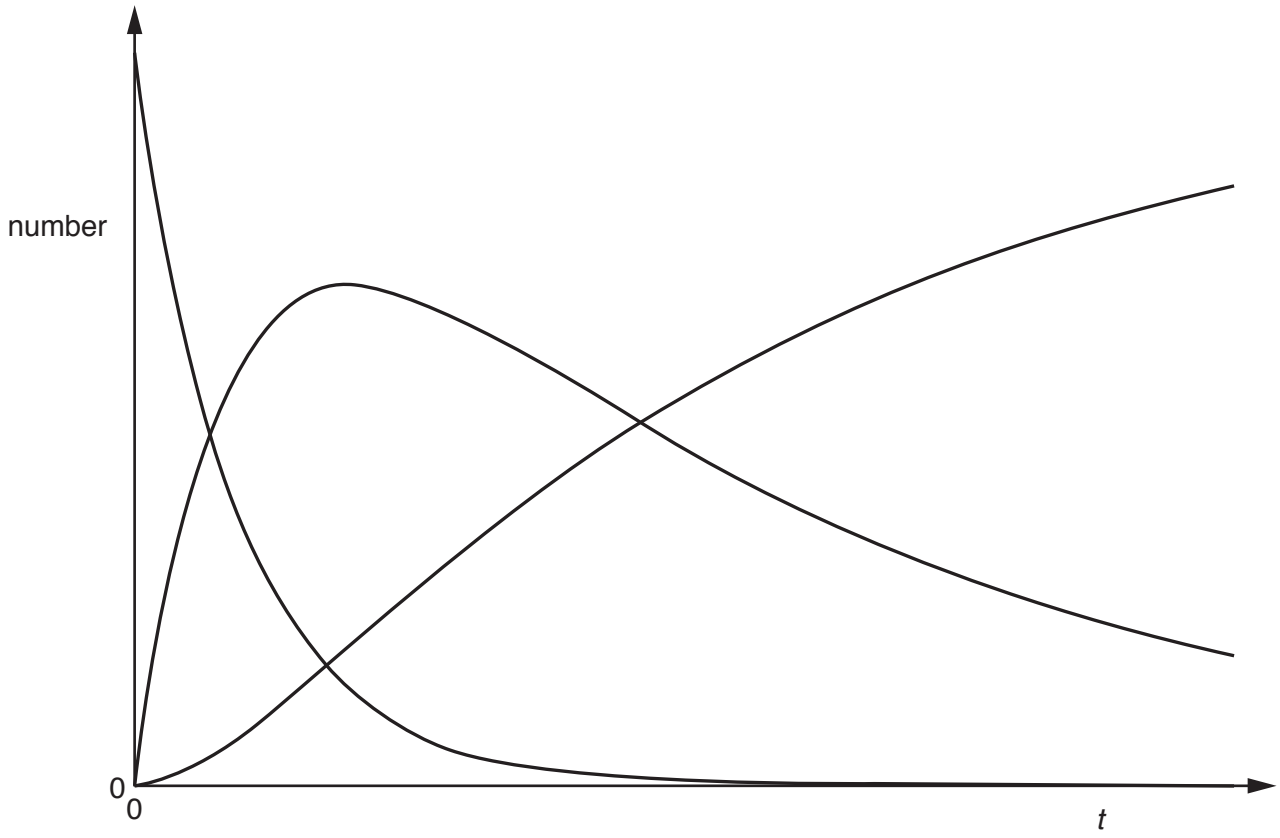

Fig. 12.2

© UCLES 2018

(i) On Fig. 12.2, use the symbols P, D and S to identify the curve for each of the three nuclides. [2]

(ii) The half-life of nuclide P is 60.0 minutes.

Calculate the decay constant λ_P, in s^{-1}, of this nuclide.

λ_P = ...s^{-1} [2]

(c) In the decay chain shown in Fig. 12.1, λ_P is approximately equal to $5\lambda_D$.

The decay chain of a different nuclide E is illustrated in Fig. 12.3.

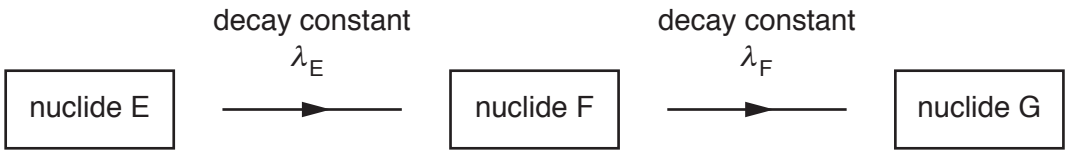

Fig. 12.3

The decay constant λ_F of nuclide F is very much larger than the decay constant λ_E of nuclide E.

By reference to the half-life of nuclide F, explain why the number of nuclei of nuclide F in the sample is always small.

.....

.....

.....[2]

[Total: 8]

© UCLES 2018

BLANK PAGE

Permission to reproduce items where third-party owned material protected by copyright is included has been sought and cleared where possible. Every reasonable effort has been made by the publisher (UCLES) to trace copyright holders, but if any items requiring clearance have unwittingly been included, the publisher will be pleased to make amends at the earliest possible opportunity.

To avoid the issue of disclosure of answer-related information to candidates, all copyright acknowledgements are reproduced online in the Cambridge International Examinations Copyright Acknowledgements Booklet. This is produced for each series of examinations and is freely available to download at www.cie.org.uk after the live examination series.

Cambridge International Examinations is part of the Cambridge Assessment Group. Cambridge Assessment is the brand name of University of Cambridge Local Examinations Syndicate (UCLES), which is itself a department of the University of Cambridge.

© UCLES 2018